一. R系列结构图
R series structural drawing

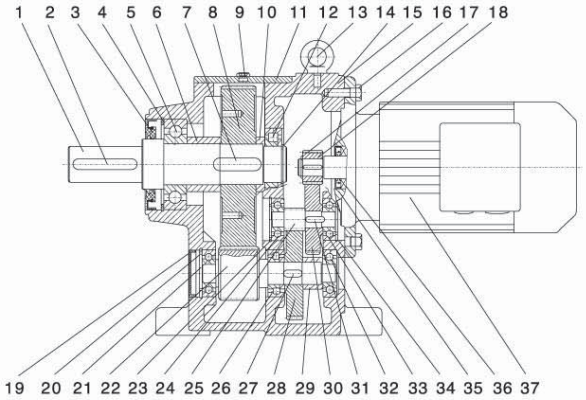

1.输出轴
2.平键Ⅰ
3.输出轴油封
4.孔用挡圈Ⅰ
5.轴承Ⅰ
6.轴套Ⅰ
7.平键Ⅱ
8.齿轮Ⅲ
9.通气帽
10.轴套Ⅱ
11. 盖
12.轴承Ⅱ
13.吊环
14.轴用挡圈Ⅰ
15.箱体
16.螺栓
17.轴用挡圈Ⅱ
18.输入齿轮
19.封盖
20.孔用挡圈Ⅱ
21.轴承Ⅲ
22.齿轮轴Ⅲ
23.孔用挡圈Ⅲ
24.轴承Ⅳ
25.齿轮轴Ⅱ
26.轴承Ⅴ
27.平键Ⅲ
28.齿轮Ⅱ
29.轴套Ⅲ
30.齿轮Ⅰ
31.平键Ⅳ
32.轴承Ⅵ
33.轴承Ⅶ
34.孔用挡圈Ⅳ
35.电机油封
36.电机轴承
37.电机

1.Output shaft
2.Parallel key
3.Output shaft seal
4.Circlip Ⅰ
5.Bearing Ⅰ
6.Bush Ⅰ
7.Parallel key Ⅱ
8.Gear Ⅲ
9.Breather valve
10.Bush Ⅱ
11.Cover
12.Bearing Ⅱ
13.Hoisting ring
14.Circlip Ⅱ
15.Housing
16.Bolts
17.Circlip Ⅱ
18.Input gear
19.Cover
20.Circlip Ⅱ
21.Bearing Ⅲ
22.Gear shaft Ⅲ
23.Circlip Ⅲ
24.Bearing Ⅳ
25.Gear shaft Ⅱ
26.Bearing Ⅴ
27.Parallel key Ⅲ
28.Gear Ⅱ
29.Bush Ⅲ
30.Gear Ⅰ
31.Parallel key Ⅳ
32.Bearing Ⅵ
33.Bearing Ⅷ
34.Circlip Ⅳ
35.Motor seal
36.Motor bearing
37.Motor

二. F系列结构图
F series structural drawing

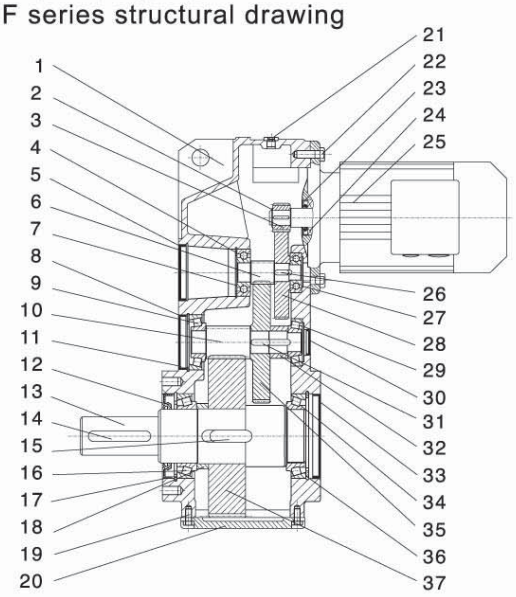

1.箱体
2.轴用挡圈Ⅰ
3.输入齿轮
4.孔用挡圈Ⅰ
5.封盖Ⅰ
6.齿轮轴Ⅱ
7.轴承Ⅰ
8.封盖Ⅱ
9.轴承Ⅱ
10.齿轮轴Ⅲ
11.孔用挡圈Ⅱ
12.输出轴油封
13.输出轴
14.平键Ⅰ
15.平键Ⅱ
16.轴承Ⅲ
17.孔用挡圈Ⅲ
18.轴套Ⅲ
19.螺栓
20. 盖
21.通气帽
22.螺栓
23.电机油封
24.电机轴承
25.电机
26.平键Ⅲ
27.轴承Ⅳ
28.齿轮Ⅰ
29.轴承Ⅴ
30.封盖Ⅲ
31.平键Ⅳ
32.轴套Ⅱ
33.封盖Ⅳ
34.轴承Ⅵ
35.齿轮Ⅱ
36.孔用挡圈Ⅳ
37.齿轮Ⅲ

1.Housing
2.Circlip Ⅰ
3.Output gear
4.Circlip Ⅰ
5.Cover
6.Gear shaft Ⅱ
7.Bearing Ⅰ
8.Cover Ⅱ
9.Bearing Ⅱ
10.Gear shaft Ⅲ
11.Circlip Ⅱ
12.Output shaft seal
13.Output shaft
14.Parallel key Ⅰ
15.Parallel key Ⅱ
16.Bearing Ⅲ
17.Circlip Ⅲ
18.Bush Ⅲ
19.Bolts
20.Cover
21.Breather valve
22.Bolts
23.Motor seal
24.Motor bearing
25.Motor
26.Parallel key Ⅲ
27.Bearing Ⅳ
28.Gear Ⅰ
29.Bearing Ⅴ
30.Cover Ⅲ
31.Parallel key Ⅳ
32.Bush Ⅱ
33.Cover Ⅳ
34.Bearing Ⅵ
35.Gear Ⅱ
36.Circlip Ⅳ
37.Gear Ⅲ

三. T系列结构图
T series structural drawing

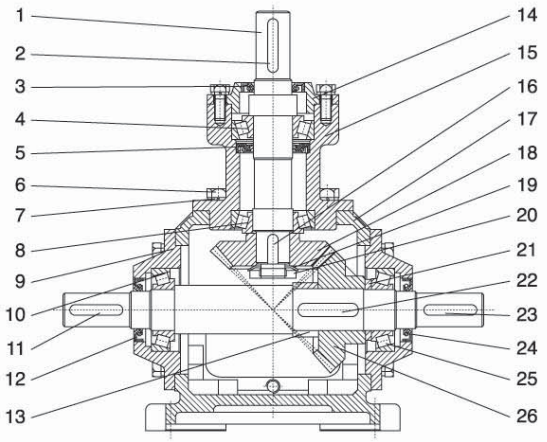

1.输入轴
2.平键Ⅰ
3.输入轴油封
4.轴承Ⅰ
5.输入轴油封
6.螺栓
7.弹簧垫圈
8.轴承Ⅱ
9.输出法兰
10.输承Ⅲ
11.平键Ⅱ
12.输出轴油封Ⅰ
13.调整垫Ⅱ
14.输入法兰盖
15.输入法兰
16.平键Ⅲ
17.箱体
18.输入弧齿锥齿轮
19.止动垫圈
20.圆螺母
21.调整垫Ⅰ
22.平键Ⅳ
23.平键Ⅴ
24.输出轴油封Ⅱ
25.轴承Ⅳ
26.输出弧齿锥齿轮

1.Input shaft
2.Parallel key Ⅰ
3.Input shaft seal
4.Bearing Ⅰ
5.Input shaft seal
6.Bolts
7.Washer
8.Bearing Ⅱ
9.Output flange
10.Bearing Ⅲ
11.Parallel key Ⅱ
12.Output shaft seal Ⅰ
13.Ring Ⅱ
14.Input flange cover
15.Input flange
16.Parallel key Ⅲ
17.Housing
18.Input helical -bevel gear
19.Washer
20.Round screw nut
21.Ring Ⅰ
22.Parallel key Ⅳ
23.Parallel key Ⅴ
24.Output shaft seal Ⅱ
25.Bearing Ⅳ
26.Output helical -bevel gear

四. K系列结构图

K series structural drawing

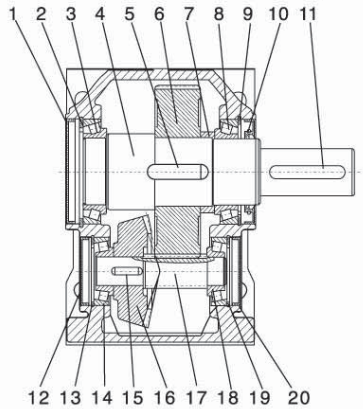

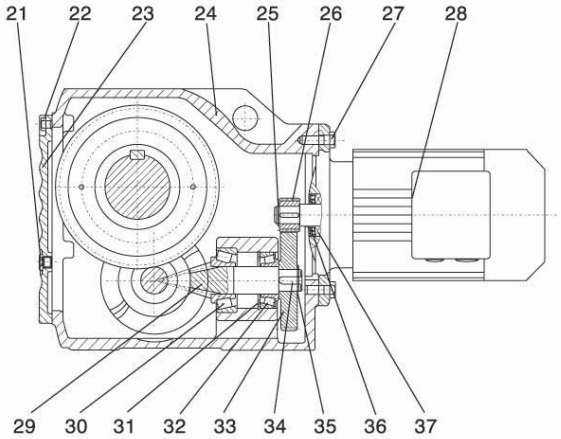

1.封盖Ⅰ
2.孔用挡圈Ⅰ
3.轴承Ⅰ
4.输出轴
5.平键Ⅰ
6.齿轮Ⅲ
7.轴套Ⅲ
8.轴承Ⅱ
9.孔用挡圈Ⅱ
10.输出轴油封
11.平键Ⅱ
12.封盖Ⅱ
13.孔用挡圈Ⅲ
14.轴承Ⅲ
15.平键Ⅲ
16.弧齿锥齿轮
17.齿轮轴Ⅲ
18.轴承Ⅳ
19.孔用挡圈Ⅳ
20.封盖Ⅲ
21.通气帽
22.螺栓Ⅰ
23.端盖
24.箱体
25.轴用挡圈Ⅰ
26.输入齿轮
27.螺栓Ⅱ
28.电机
29.弧齿锥齿轮轴
30.轴承Ⅴ
31.孔用挡圈Ⅴ
32.轴承Ⅵ
33.齿轮Ⅰ
34.平键Ⅳ
35.轴用挡圈Ⅱ
36.电机油封
37.电机轴承

1.Cover Ⅰ
2.Circlip Ⅰ
3.Bearing Ⅰ
4.Output shaft
5.Parallel key Ⅰ
6.Gear Ⅲ
7.Bush Ⅲ
8.Bearing Ⅱ
9.Circlip Ⅱ
10.Output shaft seal
11.Parallel key Ⅱ
12.Cover Ⅱ
13.Circlip Ⅲ
14.Bearing Ⅲ
15.Parallel key Ⅲ
16.Helical-bevel gear
17.Gear shaft Ⅲ
18.Bearing Ⅳ
19.Circlip Ⅳ
20.Cover Ⅲ
21.Breather valve
22.Bolts Ⅱ
23.Cover
24.Housing
25.Circlip Ⅰ
26.Input gear
27.Bolts Ⅱ
28.Motor
29.Helical-bevel gear shaft
30.Bearing Ⅴ
31.Circlip Ⅴ
32.Bearing Ⅵ
33.Gear Ⅰ
34.Parallel key Ⅳ
35.Circlip Ⅱ
36.Motor seal
37.Motor bearing

五. S系列结构图

S series structural drawing

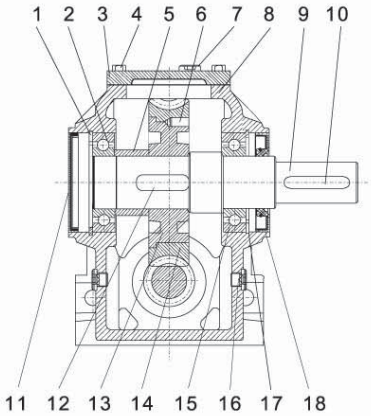

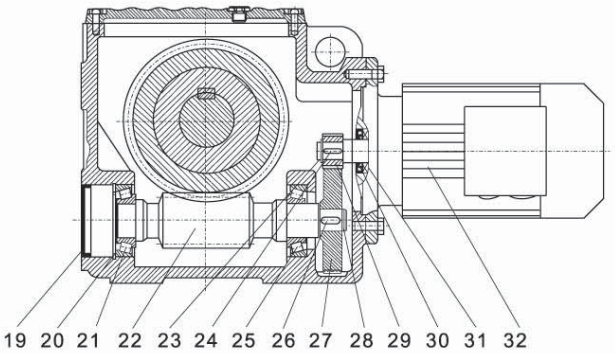

1.孔用挡圈Ⅰ
2.轴承Ⅰ
3. 盖
4.螺栓Ⅱ
5.轴套Ⅲ
6.螺钉
7.通气帽
8.箱体
9.输出轴
10.平键Ⅰ
11.封盖Ⅰ
12.平键Ⅱ
13.蜗轮芯
14.蜗轮轮缘
15.轴承Ⅱ
16.油镜
17.孔用挡圈Ⅱ
18.输出轴油封
19.封盖Ⅱ
20.孔用挡圈Ⅲ
21.轴承Ⅲ
22.蜗杆
23.轴用挡圈Ⅰ
24.平键Ⅲ
25.轴承Ⅳ
26.平键Ⅳ
27.齿轮Ⅰ
28.轴用挡圈Ⅱ
29.输入齿轮
30.电机油封
31.电机轴承
32.电机

1.Circlip Ⅰ
2.Bearing Ⅰ
3.Cover
4.Bolts Ⅱ
5.Bush Ⅲ
6.Screws
7.Breather valve
8.Housing
9.Output shaft
10.Parallel key Ⅰ
11.Cover Ⅰ
12.Parallel key Ⅱ
13.Worm wheel core
14.Worm wheel edge
15.Bearing Ⅱ
16.Oil sight glass
17.Circlip Ⅱ
18.Output shaft seal
19.Cover Ⅱ
20.Circlip Ⅲ
21.Bearing Ⅲ
22.Worm
23.Circlip Ⅰ
24.Parallel key Ⅲ
25.Bearing Ⅳ
26.Parallel key Ⅳ
27.Gear Ⅰ
28.Circlip Ⅱ
29.Input gear
30.Motor seal
31.Motor bearing
32.Motor

六. H、B系列结构图

H、B series structural drawing

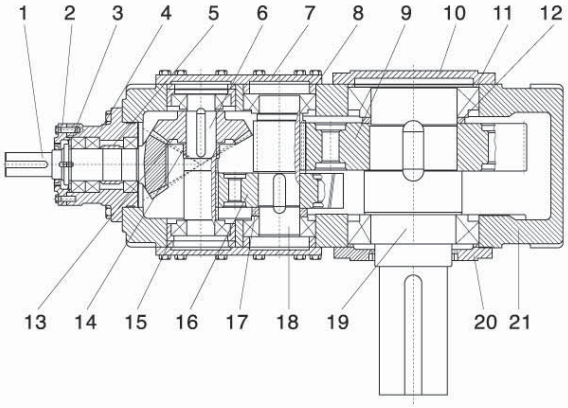

1.弧齿锥齿轮轴
2.通盖Ⅰ
3.调整环Ⅰ
4.轴承座
5.定距环Ⅰ
6.齿轮轴Ⅰ
7.止盖Ⅰ
8.调整环Ⅲ
9.齿轮Ⅲ
10.止盖Ⅱ
11.调整环Ⅳ
12.定距环Ⅳ
13.弧齿锥齿轮
14.定距环Ⅱ
15.调整环Ⅱ
16.齿轮Ⅱ
17.定距环Ⅲ
18.齿轮轴Ⅱ
19.输出轴
20.通盖Ⅱ
21.机体

1.Helical-bevel gear shaft
2.Cover Ⅰ
3.Ring Ⅰ
4.Bearing seat
5.Ring Ⅰ
6.Gear shaft Ⅰ
7.Cover Ⅰ
8.Ring Ⅲ
9.Gear Ⅲ
10.Cover Ⅱ
11.Ring Ⅳ
12.Ring Ⅳ
13.Helical-bevel gear
14.Ring Ⅱ
15.Ring Ⅱ
16.Gear Ⅱ
17.Ring Ⅲ
18.Gear shaft Ⅱ
19.Output shaft
20.Cover Ⅱ
21.Housing

电机双出轴：

Double extended shaft motor:

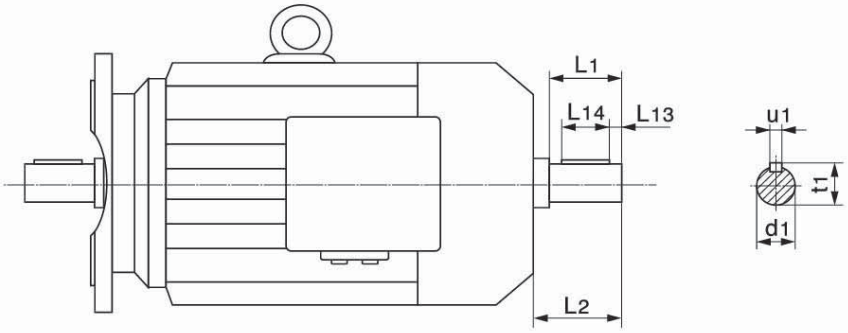

	63	71	80	90/100	112	132S	132M	160L	180	200–225
d1	11	11	14	19	24	28	38	42	48	55
L1	23	23	30	40	50	60	80	110	110	110
L2	27	25	31	42	55	65	85	115	115	115
L13	3.5	1	4	4	5	5	5	10	10	10
L14	16	20	22	32	40	50	70	70	80	90
t1	12.5	12.5	16	21.5	27	31	41	45	51.5	59
u1	4	4	5	6	8	8	10	12	14	16

电机配室外防护罩：

Motor equipped with shield:

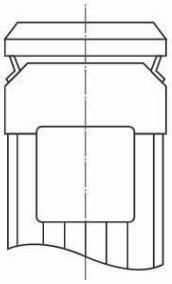

电机接线盒未注明位置一般以0°供货。

In general, position of terminal box is at angular 0° without specification.